Features

- RoHS compliant*
- HCMOS, CMOS and TTL compatible
- Compact package size
- High rotational cycle life
- Standard or high force push switch option
- Optional detent

EM14 - 14 mm Rotary Optical Encoder w/Switch

Electrical Characteristics

Electrical Output	2-bit quadrature code
Resolution	8 to 64 pulses per revolution (PPR)
Supply Voltage (VCC)	5.0 VDC ± 0.25 VDC
Supply Current (ICC)	26 mA maximum
Output Voltage	
Low (VCE(sat)), per Channel	800 mV maximum at I(SINK) = 25 mA
High (VO(HI)), per Channel	4.0 VDC minimum @ VCC = 4.75 VDC
Output Current I(SINK), per Channel	25 mA maximum
Rise/Fall Time	200 ns typical
Power Dissipation	167 mW maximum
Pulse Width (per Channel)	180 °e typical
Phase Angle (Channel A Leads Channel B, Clockwise Rotation)	90 °e ± 45 °e
Insulation Resistance @ 500 VDC	1,000 megohms minimum
Operating RPM	120 maximum
Switch Power Rating	12 VDC / 20 mA (600 ohms minimum load)
Switch Contact Resistance	200 ohms maximum

Environmental Characteristics

Operating Temperature Range @ 5.0 VDC	-40 °C to +70 °C (-40 °F to +158 °F)
Storage Temperature Range	-55 ºC to +125 ºC (-67 °F to +257 °F)
Vibration	15 G
Shock	50 G
Humidity	MIL-STD-202, Method 103, Condition B
Flammability	Conforms to UL 94HB
IP Rating	IP 54**

Mechanical Characteristics

Mechanical Angle	360 ° Continuous
Torque	
Starting/Running	1.06 N-cm (1.5 oz.-in.) maximum
Detent	1.2 N-cm (1.7 oz.-in.) typical
Rotational Life	
Non-detent (@ 30 RPM)	1,000,000 cycles (2,000,000 revolutions)
With detent (@ 30 RPM)	100,000 cycles (200,000 revolutions)
Switch Life	100,000 cycles
Switch Actuation Force	
Standard	250 gm (8.82 oz.) typical
High Force	850 gm (29.98 oz.) typical
Switch Travel	
Standard	0.04 in. typical
High Force	0.025 in. typical
Shaft Radial Play	0.005 in. maximum
Shaft Axial Structural Strength	35 lbs. minimum
Mounting Torque	2.0 N-m (18 lb.-in.) maximum

Materials and Finishes

Terminals	Sn plated PC pins
Soldering Condition	
Manual Soldering	96.5Sn/3.0Ag/0.5Cu solid wire or no-clean rosin cored wire 370 °C (700 °F) max. for 3 seconds
Wave Soldering	96.5Sn/3.0Ag/0.5Cu solder with no-clean flux 260 °C (500 °F) max. for 5 seconds
Wash processes	Not recommended
Mounting Hardware	
Nut	Black annodized brass, hex (metric)/Nickel-plated brass, hex (SAE)
Lockwasher	Nickel-plated spring steel, internal tooth
Marking	Manufacturer's symbol, model number, product code, terminal style and date code
Standard Packaging	Anti-static plastic tube (25 pcs./tube)

**When device is mounted by normal mounting means.

WARNING
Cancer and Reproductive Harm
www.P65Warnings.ca.gov

*RoHS Directive 2015/863, Mar 31, 2015 and Annex.
Specifications are subject to change without notice. Users should verify actual device performance in their specific applications. The products described herein and this document are subject to specific legal disclaimers as set forth on the last page of this document, and at www.bourns.com/docs/legal/disclaimer.pdf

Additional Features

- Splashproof shaft seal
- Recommended for human/machine interface applications (HMI)
- Cable/connector option
- Optional bracket

EM14 - 14 mm Rotary Optical Encoder w/Switch

BOURNS®

Part Numbering System

E	M	1	4	A	0	D	-	C	2	4	-	L	0	3	2	S

MODEL NO. DESIGNATOR	
EM14	14 mm Rotary Optical Encoder

BUSHING DESIGNATOR	
Code	**Description**
A	3/8 ˝ D x 3/8 ˝ L Threaded
C	1/4 ˝ D x 1/4 ˝ L Threaded
R	10 mm D x 9.5 mm L Threaded

DETENT OPTION	
Code	**Description**
0	No Detent
1	32 Detents (Available for 8 or 32 PPR only)

ANTI-ROTATION LUG/BRACKET OPTION	
Code	**Description**
A	A/R Lug
B	Bracket (No hardware/no cable or connector)
D	None

SHAFT STYLE (See Outline Drawing for Details)		
Code	**Description**	**Available w/ Bushing**
B	1/4 ˝ Dia. Slotted End	A
C	1/4 ˝ Dia. Flatted End	A
E	1/8 ˝ Dia. Slotted End	C
R	6 mm Dia. Slotted End	R
M	6 mm Dia. Flatted End	R

SHAFT LENGTH DESIGNATOR		
Code	**Length (FMS)**	**Available w/Bushing**
24	3/4 ˝	A, C
28	7/8 ˝	A, C
20	20 mm	R, U
25	25 mm	R, U

TERMINAL CONFIGURATION	
Code	**Description**
L	Axial Multi-Purpose Pin
R	Radial Multi-Purpose Pin

SWITCH OPTION	
Code	**Description**
S	Push Switch (Standard)
H	Push Switch (High Force)
N	No Switch

RESOLUTION (Pulses Per Revolution)	
Code	**Description**
08	8 PPR
16	16 PPR
32	32 PPR
64	64 PPR

CABLE/CONNECTOR OPTION	
Code	**Description**
0	No Cable/Connector
1	6 ˝ Cable with Female Connector and stripped/tinned leads
2	6 ˝ Cable with Female Connector on both ends
3	12 ˝ Cable with Female Connector and stripped/tinned leads
4	12 ˝ Cable with Female Connector on both ends
5	3 ˝ Cable with Female Connector and stripped/tinned leads
6	1.5 ˝ Cable with Female Connector and stripped/tinned leads
7	2 ˝ Cable with Female Connector and stripped/tinned leads
8	5 ˝ Cable with Female Connector and stripped/tinned leads

For other cable and connector options, please contact the factory.

Specifications are subject to change without notice.
Users should verify actual device performance in their specific applications.
The products described herein and this document are subject to specific legal disclaimers as set forth on the last page of this document, and at www.bourns.com/docs/legal/disclaimer.pdf.

EM14 - 14 mm Rotary Optical Encoder w/Switch

BOURNS®

Product Dimensions

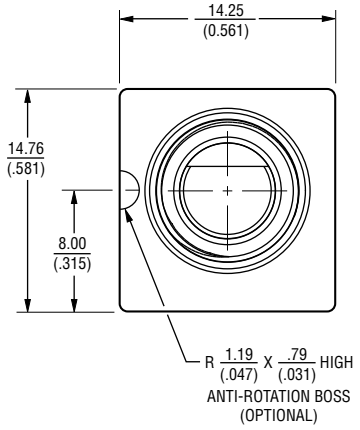

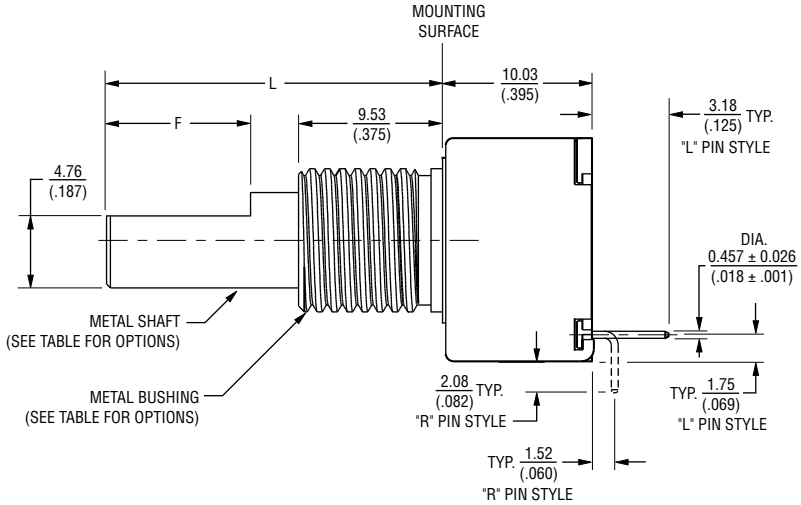

Shaft / Flat Length Dimensions

"A" Style Bushing - Flatted Shafts

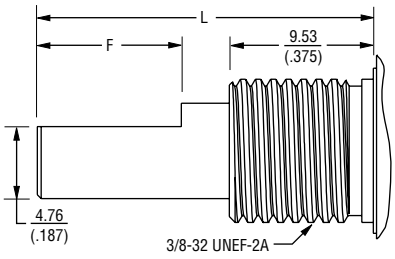

SHAFT DIA.	BUSHING DIA.	SHAFT LENGTH "L"	FLAT LENGTH "F"
6.35 (.250)	9.52 (.375)	19.05 (.750)	7.94 (.313)
		22.22 (.875)	9.52 (.375)

"R" Style Bushing - Flatted Shafts

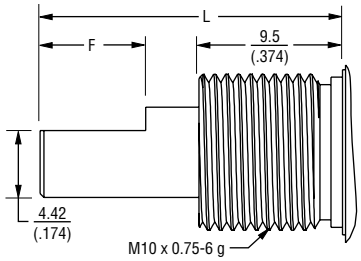

SHAFT DIA.	BUSHING DIA.	SHAFT LENGTH "L"	FLAT LENGTH "F"
6.0 (.236)	10.0 (.394)	20.0 (.787)	7.0 (.275)
		25.0 (.984)	12.0 (.472)

"C" Style Bushing - Slotted Shafts

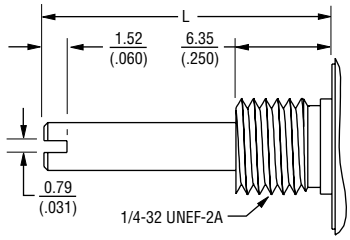

SHAFT DIA.	BUSHING DIA.	SHAFT LENGTH "L"
3.17 (.125)	6.35 (.250)	19.05 (.750)
		22.22 (.875)

"A" Style Bushing - Slotted Shafts

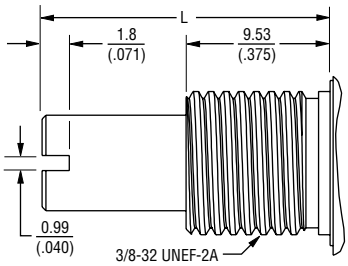

SHAFT DIA.	BUSHING DIA.	SHAFT LENGTH "L"
6.35 (.250)	9.52 (.375)	19.05 (.750)
		22.22 (.875)

"R" Style Bushing - Slotted Shafts

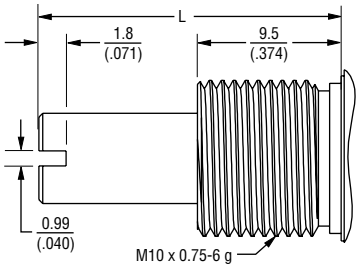

SHAFT DIA.	BUSHING DIA.	SHAFT LENGTH "L"
6.0 (.236)	10.0 (.394)	20.0 (.787)
		25.0 (.984)

DIMENSIONS: MM (INCHES)

Specifications are subject to change without notice.
Users should verify actual device performance in their specific applications.
The products described herein and this document are subject to specific legal disclaimers as set forth on the last page of this document, and at www.bourns.com/docs/legal/disclaimer.pdf.

Cable/Connector Options

Cable Assembly, Connector on One End

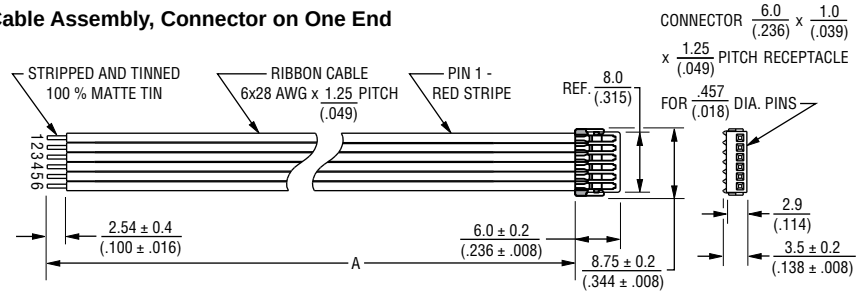

Cable Assembly, Connector on Both Ends

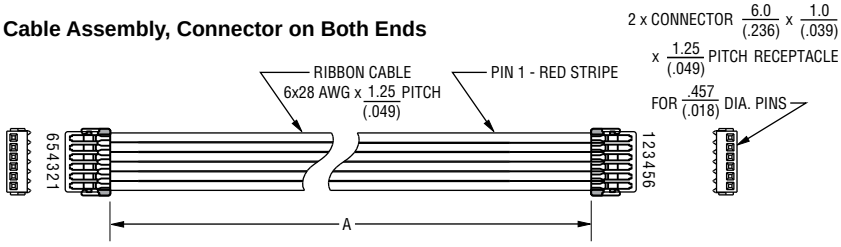

HDW. NO.	DESCRIPTION	"A" DIM.
H-290-1	CABLE ASSEMBLY, CONNECTOR ON BOTH ENDS	152.4 ± 5.0 (6.0 ± .197)
H-290-2	CABLE ASSEMBLY, CONNECTOR ON ONE END	304.8 ± 5.0 (12.0 ± .197)
H-290-3	CABLE ASSEMBLY, CONNECTOR ON BOTH ENDS	304.8 ± 5.0 (12.0 ± .197)
H-290-4	CABLE ASSEMBLY, CONNECTOR ON ONE END	152.4 ± 5.0 (6.0 ± .197)
H-290-5	RIBBON CABLE, 28 AWG, CONNECTOR ON ONE END	76.2 ± 5.0 (3.0 ± .197)
H-290-6	RIBBON CABLE, 28 AWG, CONNECTOR ON ONE END	38.1 ± 5.0 (1.5 ± .197)
H-290-7	RIBBON CABLE, 28 AWG, CONNECTOR ON ONE END	50.8 ± 5.0 (2.0 ± .197)
H-290-8	RIBBON CABLE, 28 AWG, CONNECTOR ON ONE END	127 ± 5.0 (5.0 ± .197)

Terminal Configurations

Radial (shown with optional mounting bracket)

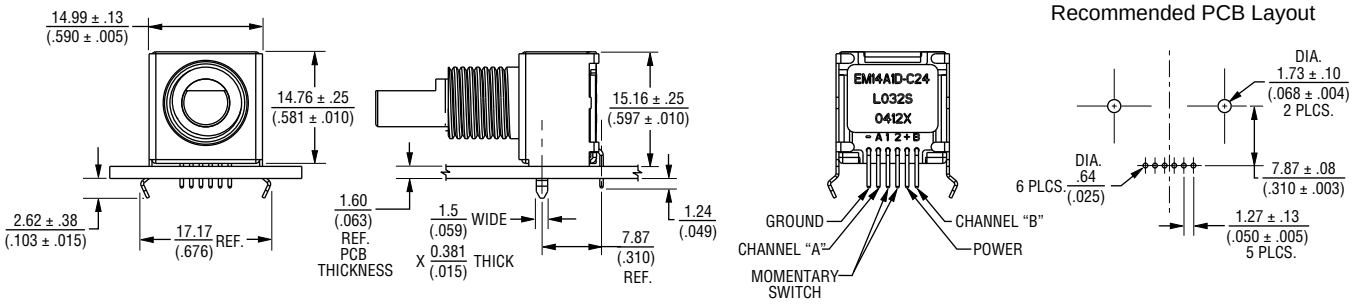

Axial (shown with optional mounting bracket)

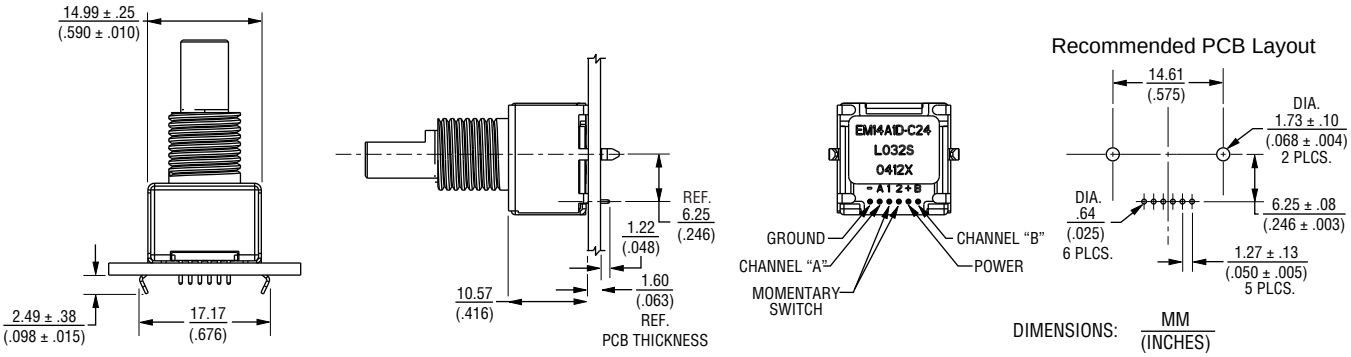

Specifications are subject to change without notice.
Users should verify actual device performance in their specific applications.
The products described herein and this document are subject to specific legal disclaimers as set forth on the last page of this document, and at www.bourns.com/docs/legal/disclaimer.pdf.

Electrical Block Diagram

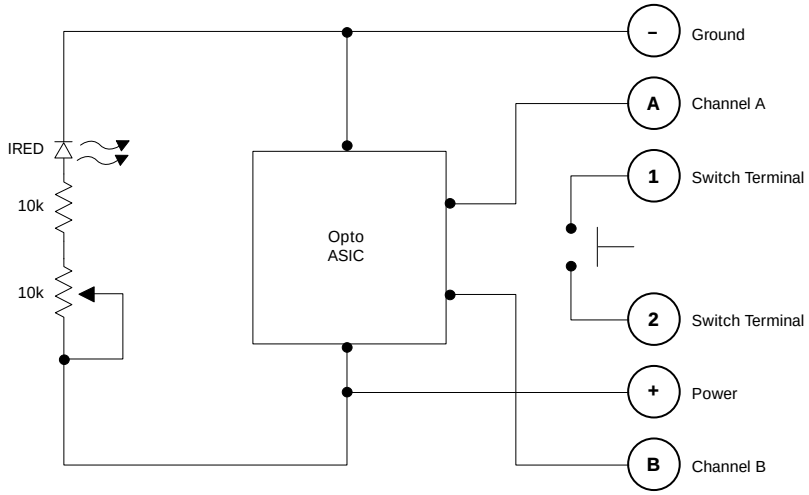

Terminal Diagram

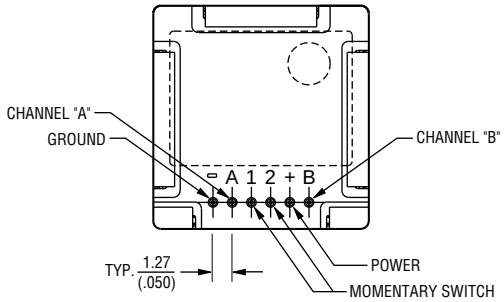

Quadrature Output

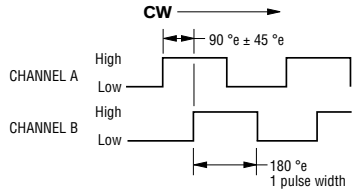

32 DETENT / 8 PPR

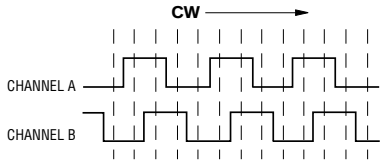

32 DETENT / 32 PPR

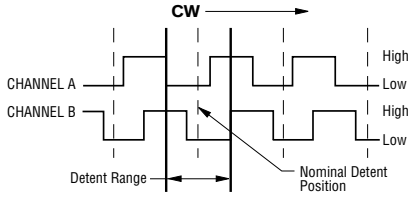

1. Nominal detent position occurs when both Channel A and B are in low states.
2. Channel A leads Channel B in CW direction and lags in CCW direction.

Asia-Pacific: Tel: +886-2 2562-4117 • Email: asiacus@bourns.com
EMEA: Tel: +36 88 885 877 • Email: eurocus@bourns.com
The Americas: Tel: +1-951 781-5500 • Email: americus@bourns.com
www.bourns.com

REV. 09/19

Specifications are subject to change without notice.
Users should verify actual device performance in their specific applications.
The products described herein and this document are subject to specific legal disclaimers as set forth on the last page of this document, and at www.bourns.com/docs/legal/disclaimer.pdf.

Legal Disclaimer Notice

BOURNS®

This legal disclaimer applies to purchasers and users of Bourns® products manufactured by or on behalf of Bourns, Inc. and its affiliates (collectively, "Bourns").

Unless otherwise expressly indicated in writing, Bourns® products and data sheets relating thereto are subject to change without notice. Users should check for and obtain the latest relevant information and verify that such information is current and complete before placing orders for Bourns® products.

The characteristics and parameters of a Bourns® product set forth in its data sheet are based on laboratory conditions, and statements regarding the suitability of products for certain types of applications are based on Bourns' knowledge of typical requirements in generic applications. The characteristics and parameters of a Bourns® product in a user application may vary from the data sheet characteristics and parameters due to (i) the combination of the Bourns® product with other components in the user's application, or (ii) the environment of the user application itself. The characteristics and parameters of a Bourns® product also can and do vary in different applications and actual performance may vary over time. Users should always verify the actual performance of the Bourns® product in their specific devices and applications, and make their own independent judgments regarding the amount of additional test margin to design into their device or application to compensate for differences between laboratory and real world conditions.

Unless Bourns has explicitly designated an individual Bourns® product as meeting the requirements of a particular industry standard (e.g., ISO/TS 16949) or a particular qualification (e.g., UL listed or recognized), Bourns is not responsible for any failure of an individual Bourns® product to meet the requirements of such industry standard or particular qualification. Users of Bourns® products are responsible for ensuring compliance with safety-related requirements and standards applicable to their devices or applications.

Bourns® products are not recommended, authorized or intended for use in nuclear, lifesaving, life-critical or life-sustaining applications, nor in any other applications where failure or malfunction may result in personal injury, death, or severe property or environmental damage. Unless expressly and specifically approved in writing by two authorized Bourns representatives on a case-by-case basis, use of any Bourns® products in such unauthorized applications might not be safe and thus is at the user's sole risk. Life-critical applications include devices identified by the U.S. Food and Drug Administration as Class III devices and generally equivalent classifications outside of the United States.

Bourns expressly identifies those Bourns® standard products that are suitable for use in automotive applications on such products' data sheets in the section entitled "Applications." Unless expressly and specifically approved in writing by two authorized Bourns representatives on a case-by-case basis, use of any other Bourns® standard products in an automotive application might not be safe and thus is not recommended, authorized or intended and is at the user's sole risk. If Bourns expressly identifies a sub-category of automotive application in the data sheet for its standard products (such as infotainment or lighting), such identification means that Bourns has reviewed its standard product and has determined that if such Bourns® standard product is considered for potential use in automotive applications, it should only be used in such sub-category of automotive applications. Any reference to Bourns® standard product in the data sheet as compliant with the AEC-Q standard or "automotive grade" does not by itself mean that Bourns has approved such product for use in an automotive application.

Bourns® standard products are not tested to comply with United States Federal Aviation Administration standards generally or any other generally equivalent governmental organization standard applicable to products designed or manufactured for use in aircraft or space applications. Bourns expressly identifies Bourns® standard products that are suitable for use in aircraft or space applications on such products' data sheets in the section entitled "Applications." Unless expressly and specifically approved in writing by two authorized Bourns representatives on a case-by-case basis, use of any other Bourns® standard product in an aircraft or space application might not be safe and thus is not recommended, authorized or intended and is at the user's sole risk.

The use and level of testing applicable to Bourns® custom products shall be negotiated on a case-by-case basis by Bourns and the user for which such Bourns® custom products are specially designed. Absent a written agreement between Bourns and the user regarding the use and level of such testing, the above provisions applicable to Bourns® standard products shall also apply to such Bourns® custom products.

Users shall not sell, transfer, export or re-export any Bourns® products or technology for use in activities which involve the design, development, production, use or stockpiling of nuclear, chemical or biological weapons or missiles, nor shall they use Bourns® products or technology in any facility which engages in activities relating to such devices. The foregoing restrictions apply to all uses and applications that violate national or international prohibitions, including embargos or international regulations. Further, Bourns® products and Bourns technology and technical data may not under any circumstance be exported or re-exported to countries subject to international sanctions or embargoes. Bourns® products may not, without prior authorization from Bourns and/or the U.S. Government, be resold, transferred, or re-exported to any party not eligible to receive U.S. commodities, software, and technical data.

To the maximum extent permitted by applicable law, Bourns disclaims (i) any and all liability for special, punitive, consequential, incidental or indirect damages or lost revenues or lost profits, and (ii) any and all implied warranties, including implied warranties of fitness for particular purpose, non-infringement and merchantability.

For your convenience, copies of this Legal Disclaimer Notice with German, Spanish, Japanese, Traditional Chinese and Simplified Chinese bilingual versions are available at:

Web Page: http://www.bourns.com/legal/disclaimers-terms-and-policies

PDF: http://www.bourns.com/docs/Legal/disclaimer.pdf

Mouser Electronics

Authorized Distributor

Click to View Pricing, Inventory, Delivery & Lifecycle Information:

Bourns:

EM14C0D-E24-L032S EM14C0D-E24-L016S EM14A0D-C24-L064N EM14A0A-C24-L064S EM14A0D-B28-L064N EM14A1A-B24-R032N EM14A1A-C24-L032S EM14A1D-B24-L032S EM14A1D-C24-L008S EM14A1D-C24-L032N EM14A1D-C24-L032S EM14A1D-C28-L032S EM14C1D-E24-L032S EM14R0D-M20-L064S EM14R1D-M20-L032S EM14R1D-M25-L032S EM14R1D-R20-L032N EM14R1D-R20-L032S EM14R1D-R25-L032S EM14A0D-C24-L008N EM14C0D-E24-L064S EM14A0D-C24-L032N EM14A1B-C24-L032S EM14A0A-B24-L064S EM14A1B-C24-R032S EM14C0D-E24-L064N EM14A0D-B28-L008S EM14A0D-B24-L032S EM14A0D-B28-L032S EM14A0D-C24-L064S EM14C0D-E28-L016N EM14C0D-E28-L064N EM14R0D-M20-L016N EM14R0D-R20-L032N EM14R0D-R20-L032S EM14R0D-R20-L064S EM14R0D-R20-R016S EM14A0B-B28-R064N EM14A0D-C24-L032S EM14R1D-M20-R008N EM14A1A-B24-L008N EM14C0D-E24-L264N EM14R1A-R20-L008N EM14R1D-R25-R032N H-290-4 H-290-1 H-290-3 H-290-2 EM14R0A-M20-R064N EM14R1A-M20-L032S EM14A1D-C24-L132N EM14A0D-B24-L064S EM14A0D-B28-L064S EM14A0D-C28-L032N EM14A0D-C28-L032S EM14A0D-C28-L064N EM14C0D-E28-L064S EM14R0D-M20-L064N EM14R0D-M25-L064N EM14A0A-B24-L164N EM14A0D-C24-L016S EM14A1D-C24-L232S EM14A0A-B24-L064N EM14A1A-B24-R032S EM14C1D-E24-L008S EM14R0D-M25-L064S EM14R1D-M20-L008S EM14A0D-C24-L132S EM14R0D-M20-R464N EM14A1D-C24-L108S EM14R1B-M20-L032S EM14R0B-M25-L064S EM14R0A-M25-R064N EM14R0D-R20-R032N EM14C0A-E24-L064S EM14C1D-E28-L032S EM14R1D-M20-L208S EM14A0D-C24-L216S EM14R0D-M20-L132S EM14A1B-C24-R008N EM14A1B-C24-L008N EM14R0B-R20-R064S EM14A1A-B28-L032N EM14A1D-C24-L008N EM14C1A-E24-L008N EM14R0B-M20-L064N EM14A1D-C28-R032H EM14A1D-B28-L032N EM14R0A-M25-L064S EM14C1A-E28-L032N EM14R1D-M25-L032N EM14A1B-C24-L032N EM14A0B-C24-L064S EM14R0B-R20-L064N EM14R1B-M20-L032N EM14A1B-B24-L032N H-290-8 EM14R1A-M20-R032S EM14R0D-M20-R064N EM14R0D-M20-L216N